Lens Specification	
Focal length	2.95mm±5%
Back focal length	5.37mm±5%
Mechanical back	4.14mm±0.3mm
Aperture ratio	F/2.0
Image size	1/2"(6.4mmX4.8mm)
Magnification	-
Distortion	-68.9%
Angle of view at INF.	
Vertical	93.3°
Horizontal	123.9°
Diagonal	154.2°
Resolution	
Center	200LP/mm
Corner	25LP/mm
Pupil positions	
Entrance pupil	5.28mm (Front lens)
Exit pupil	-18.86mm (Image plane)
Principal points	
Object space	7.77mm (Front lens)
Image space	-2.95mm (Image plane)
Coating	
All surfaces are antireflection coated. MgF2 single coated.	

Specifications above are design specifications.

Angle of view at INF.			
Image size	1/2.3" (6.24X4.71)	1/3" (3.6X4.8)	1/4" (2.7X3.6)
Vertical	91.4°	70.0°	52.5°
Horizontal	120.8°	93.3°	70.0°
Diagonal	150.6°	116.3°	87.5°

Note:

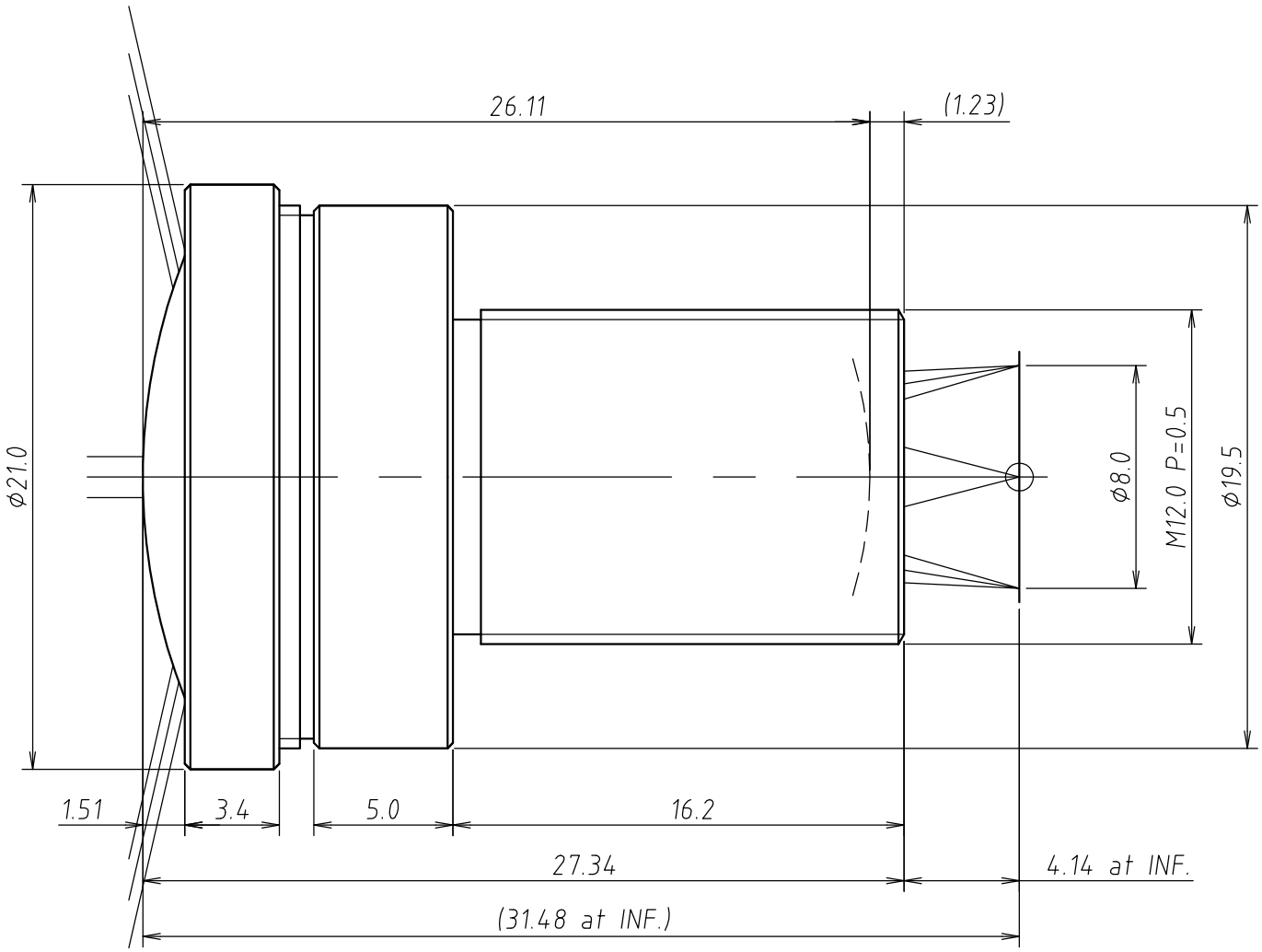

UNIVERSE KOGAKU(AMERICA),INC.
116 Audrey Avenue, Oyster Bay, New York 11771
Phone: (516)624-2444/Fax: (516)624-3109

4			TITLE 2.95mm F/2.0 LENS	DRAWN K.S.
3				
2			P/NO. LA290 / SCALE 4 : 1	CHECKED H.K.
1				
	10/03/2022		Mfg.NO. LA290A-Y01-0 / UOI LA290 / SHEET 1 OF 1	REV A