Lens Specification	
Focal length	16.0mm±0.5%
Back focal length	15.36mm±5%
Mechanical back	13.26mm
Aperture ratio	F/2.0 ±5%
Image size	2/3"(6.6X8.8)
Magnification	-
Distortion	-1.3%
Angle of view at INF.	
Vertical	23.4°
Horizontal	31.0°
Diagonal	38.4°
Resolution	W.D.=400mm
Center	200LP/mm
Corner	125LP/mm
Pupil positions	
Entrance pupil	14.82mm (Front lens)
Exit pupil	-38.98mm (Image plane)
Principal points	
Object space	24.26mm (Front lens)
Image space	-16.02mm (Image plane)
Coating	
All surfaces are antireflection coated.	

Specifications above are design specifications.

Note:

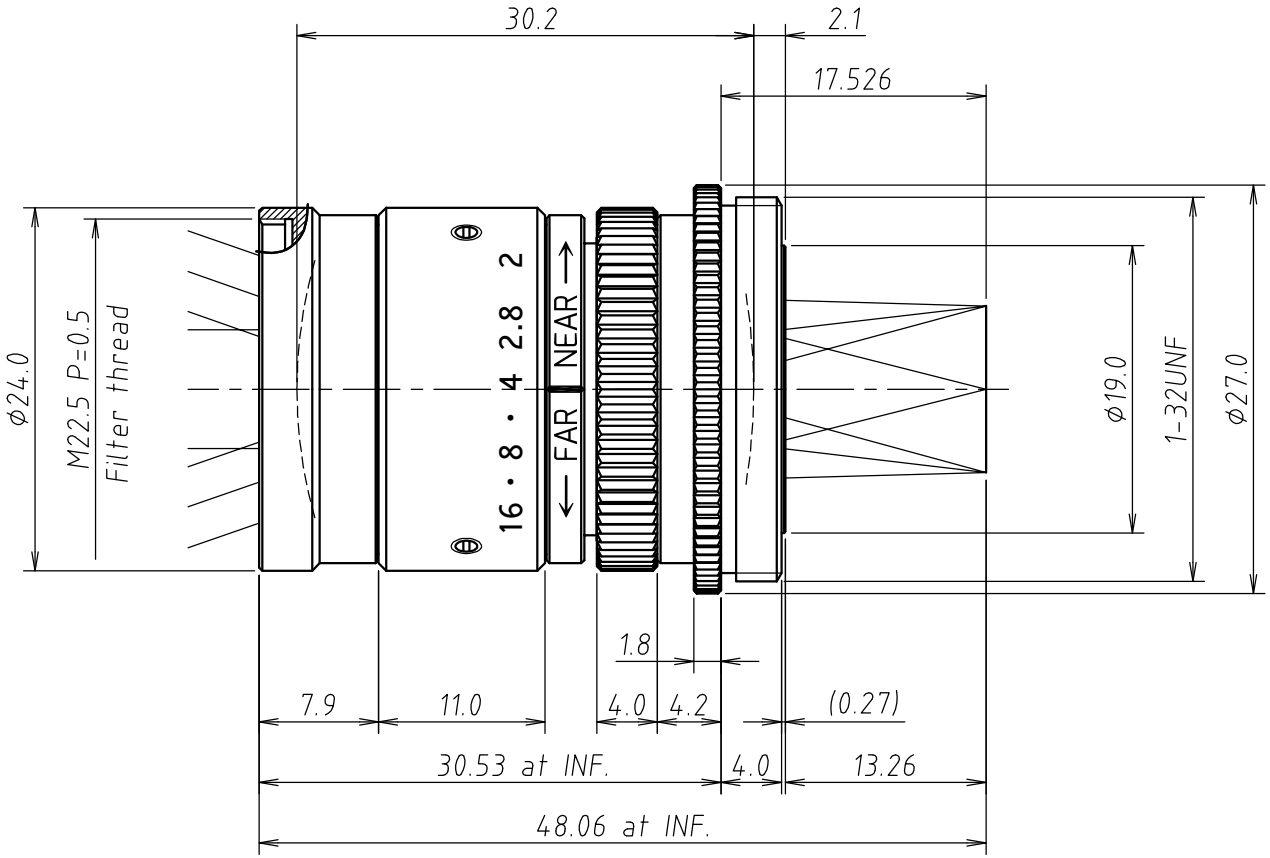

UNIVERSE KOGAKU(AMERICA),INC.
116 Audrey Avenue, Oyster Bay, New York 11771
Phone: (516)624-2444/Fax: (516)624-3109

4			TITLE 16.0mm F/2.0 LENS W/C-Mount 5Megapixel		DRAWN S.I.
3					
2			P/NO. BL160C	SCALE 2:1	CHECKED I.S.
1					
	06/05/2019		Mfg.NO. BL160C-Y02-0 / UOI BL160C	SHEET 1 OF 1	REV A